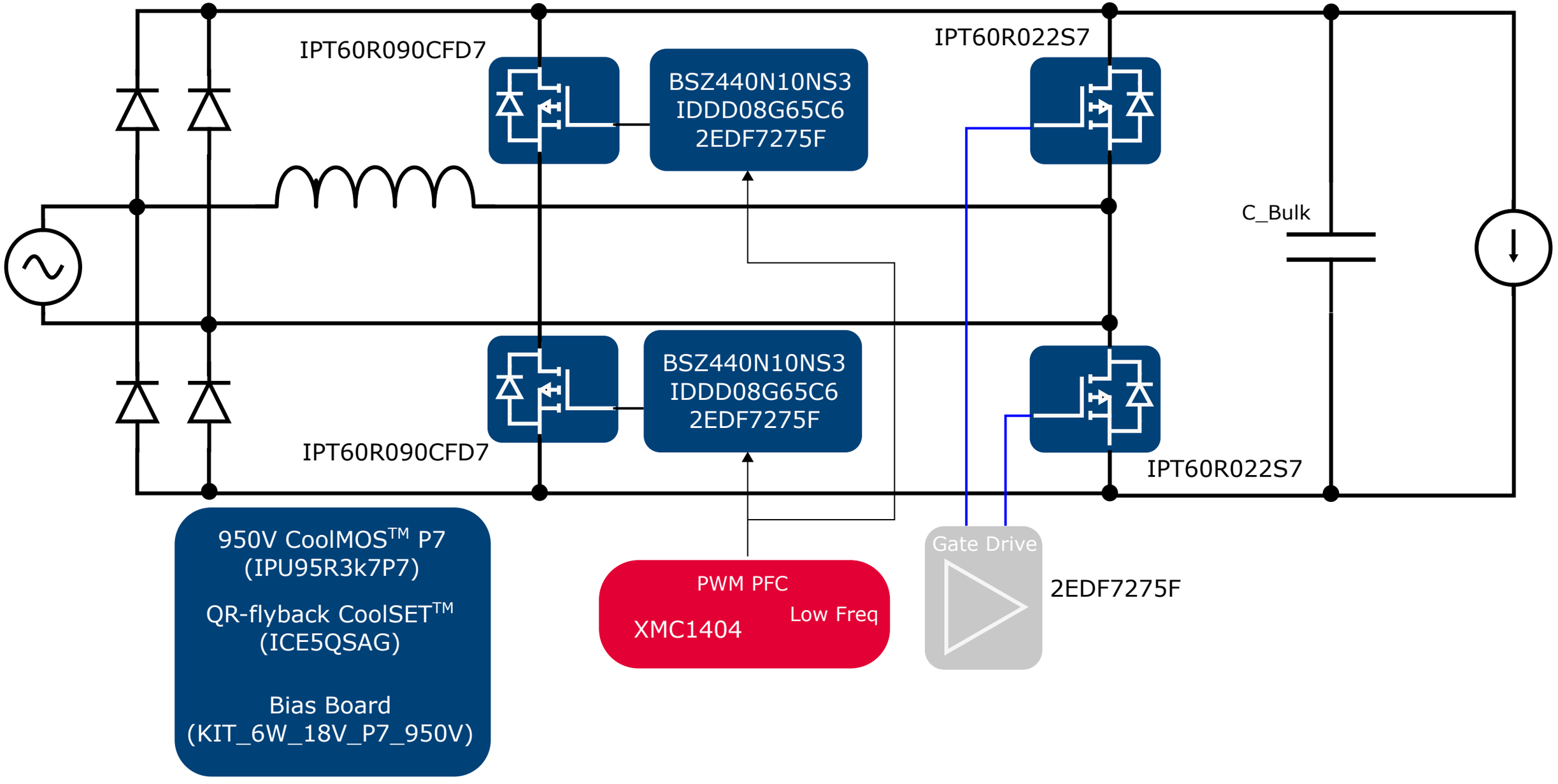
IPT60R090CFD7
BSZ440N10NS3
IDDD08G65C6
2EDF7275F
IPT60R022S7
C_Bulk
BSZ440N10NS3
IDDD08G65C6
2EDF7275F
IPT60R090CFD7
IPT60R022S7
950V CoolMOS™ P7
(IPU95R3k7P7)
QR-flyback CoolSET™
(ICE5QSAG)
Bias Board
(KIT_6W_18V_P7_950V)
PWM PFC
XMC1404
Low Freq
Gate Drive
2EDF7275F